ROYAL SCOTSMAN

A BELMOND TRAIN

SCOTLAND

DISCOVER OUR TRAIN

ROYAL SCOTSMAN

FROM THE MOMENT ROYAL SCOTSMAN, A BELMOND TRAIN, SCOTLAND DRAWS OUT OF EDINBURGH'S WAVERLEY STATION, YOU'RE EMBARKING ON A TRULY UNFORGETTABLE EXPERIENCE. SAIL INTO A MAGICAL REALM WHERE HISTORY, NATURE AND ROMANCE COMBINE. LIFE ON BOARD OUR TRAIN IS RELAXED AND INDULGENT, BLENDING GASTRONOMIC DINING WITH THE UNMISTAKABLE AIR OF A CELEBRATION AMONG GOOD FRIENDS.

LIFE ON BOARD

THE CABINS

Our Edwardian-style cabins, fitted with mahogany marquetry, provide a cosy yet opulent haven in which to retire. Royal Scotsman has four single, fifteen twin and three double cabins available. All private cabins are equipped with an ensuite shower room, a wardrobe, a desk and a picture window from which to savour the unfolding Scottish countryside.

THE NEW GRAND REFLECTION OF HIGHLAND EXCELLENCE

A seamless symphony of timeless Scottish tradition and a pioneering vision of luxury, two new Grand Suites joining the rake from May 2024 will take your Highland adventure to new heights of indulgent excellence. The new Grand Suites will complement the existing Twin and Double cabins.

DINING

The wood panelling and rich upholstery that adorn the two dining cars, Raven and Swift, set the scene for an unforgettable onboard dining experience. Our expert chefs use their inimitable flair to create imaginative dishes using the freshest local produce.

ENTERTAINMENT

Enjoy traditional Scottish entertainment after dinner in the Observation Car including music from local players.

BOUTIQUE

Visit our Boutique to purchase an exclusive memento of your time on board. Browse a rich variety of traditional Scottish crafts, including tartans and jewellery.

OBSERVATION CAR

Our splendid Observation Car is your window on Scotland's stunning scenery. Soak up the views from the comfort of the interior, or breathe in the fresh air from the exhilarating open veranda. Choose from an array of drinks at the bar, including over 50 whiskies.

DIOR SPA ROYAL SCOTSMAN

Highland-inspired and relaxing beauty rituals on the move. Completely dedicated to wellness, the spa carriage boasts two lacquered treatment rooms, styled with Christian Dior's iconic burgundy toile de Jouy motif. Step into the Dior Spa Royal Scotsman to relish, unwind and rejuvenate in a tranquil space as the train meanders through Scotland's awe-inspiring peaks and dramatic valleys.

THE JOURNEYS

Exceptional two-to seven-night journeys give you the chance to do much more than simply admire the stunning scenery. Take part in activities such as clay pigeon shooting, Highland safaris, fishing and golf, and enjoy visits to traditional whisky distilleries, local castles and grand country estates.

SEASON: APRIL TO OCTOBER

TASTE OF THE HIGHLANDS - *2 NIGHTS*
WESTERN SCENIC WONDERS - *3 NIGHTS*
SCOTLAND'S CLASSIC SPLENDOURS - *4 NIGHTS*
GRAND TASTE OF THE HIGHLANDS - *5 NIGHTS*
GRAND WESTERN SCENIC WONDERS - *7 NIGHTS*

SIGNATURE JOURNEYS

HERITAGE, HOMES & GARDENS - *4 NIGHTS*
SCOTCH MALT WHISKY TOUR - *4 NIGHTS*
CLANS, CASTLES & ISLES - *5 NIGHTS*

WHAT'S INCLUDED

- ALL TABLE D'HÔTE MEALS
- BEVERAGES INCLUDING ALCOHOLIC DRINKS
- ALL EXCURSIONS STATED IN THE ITINERARY
- PRIVATE, ENSUITE CABIN ON BOARD
- ENTERTAINMENT

GOLF OPTIONS

Keen golfers can include a round or two as part of our scheduled journeys* or extend their trip with a pre- or post-stay at one of Scotland's top courses. These include the renowned Gleneagles resort, where you can play the PGA Centenary course.

Our journeys below all offer golf options which are subject to availability:

SCOTLAND'S CLASSIC SPLENDOURS
4 nights
DAY 2: Castle Stuart Golf Links
DAY 3: Spey Valley Golf Course
DAY 4: Boat of Garten Golf Club or Gleneagles

WESTERN SCENIC WONDERS
3 nights
DAY 2: Fort William Golf Club
DAY 3: Prestwick Golf Club, West Kilbride Golf Club or Royal Troon Golf Club

TASTE OF THE HIGHLANDS
2 nights
DAY 2: Castle Stuart Golf Links or Nairn Golf Club

**All costs associated with golf, such as green fees, transfers, lunch and rentals are additional.*

ROYAL SCOTSMAN

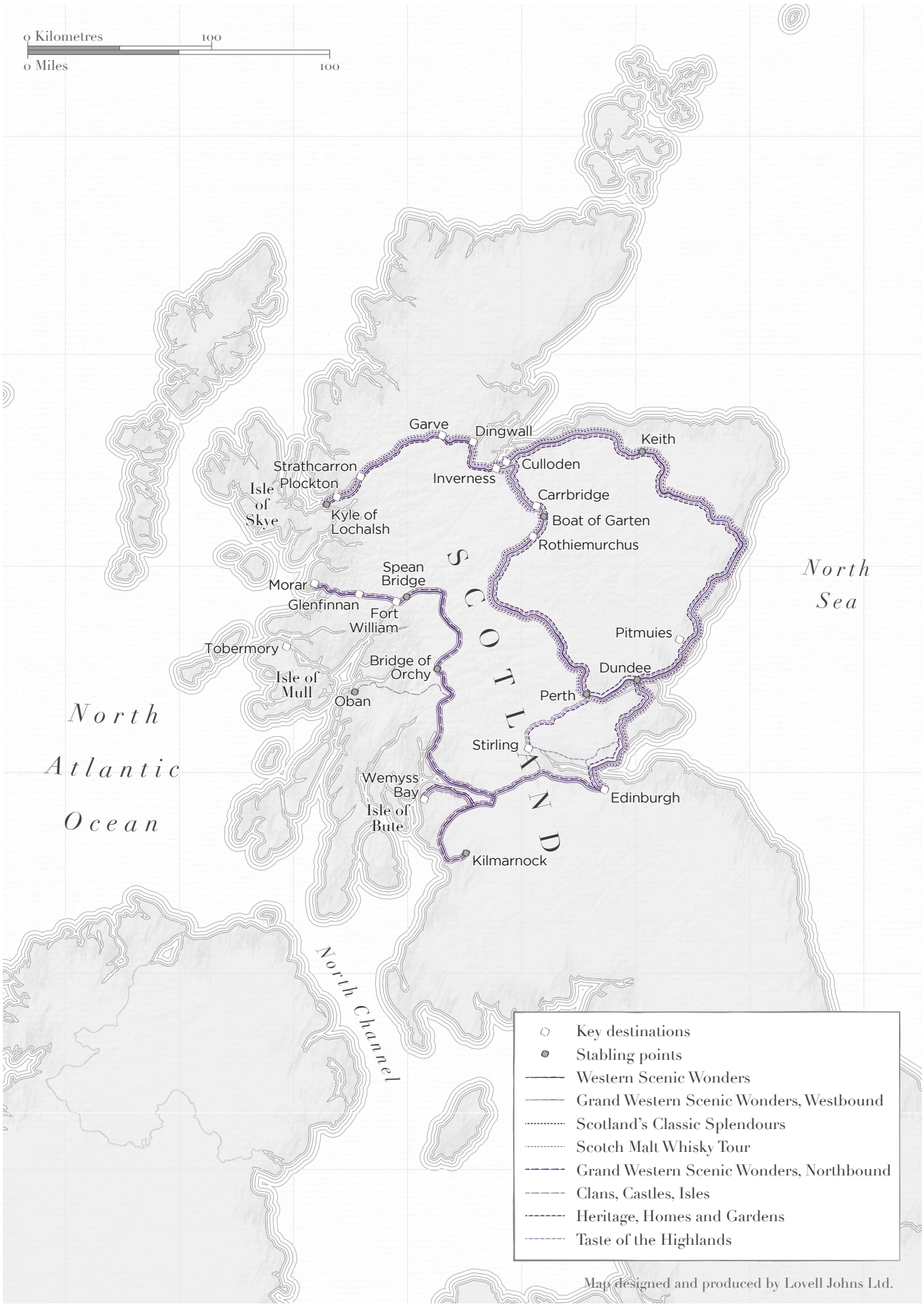

Routes shown are for guidance only and are subject to change

EXTENSIONS

Enjoy Scotland to the full by adding one of our extensions before or after your journey. Explore the dynamic capital, the lush Highland town of Fort William, or stay at the prestigious Gleneagles resort.

EDINBURGH

The flourishing Scottish capital enjoys a vibrant cultural scene as well as a wealth of fascinating historic sights. Elegant New Town, built in the late 18th century, is a shopper's paradise. We recommend staying at:

THE BALMORAL

Situated on Princes Street, in the city's heart, the landmark hotel offers 188 opulent suites and stylish rooms, many with views towards the majestic Castle and Old Town. Among the dining options are a restaurant and buzzy bar.

CAPACITY

Maximum number of guests **From 2024, the maximum will be 38*	40

TRAIN CONFIGURATION

Restaurant Cars	2
Observation Lounge	1
Spa	1

2023

CABINS	22
Twin	15
Double	3
Single	4

2024

CABINS	20
Grand Suites	2
Twin	12
Double	4
Single	2

CABIN PLANS

GRAND SUITES

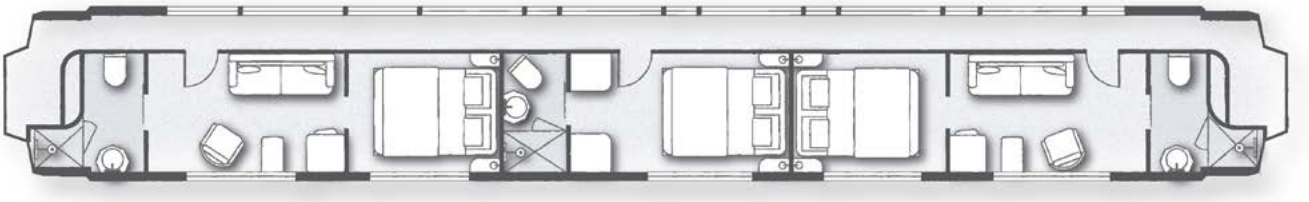

TWIN CABIN

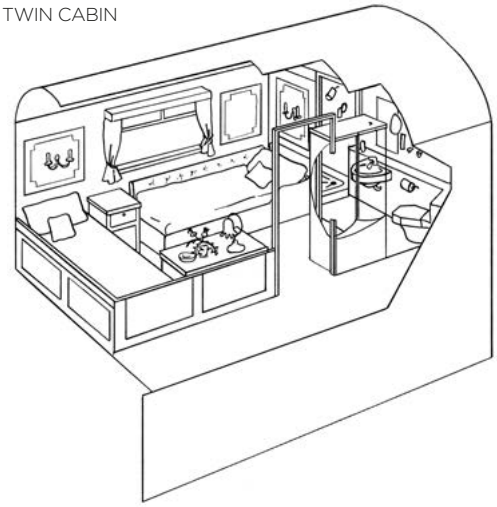

DOUBLE CABIN

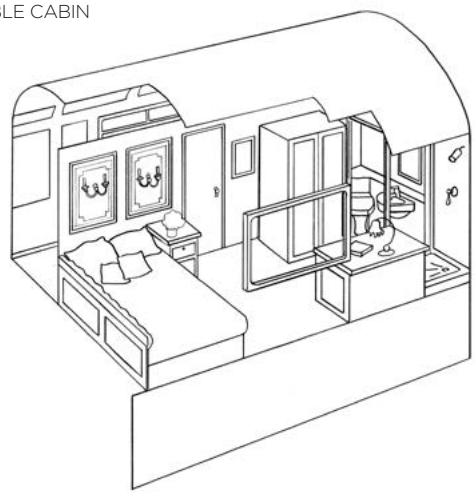
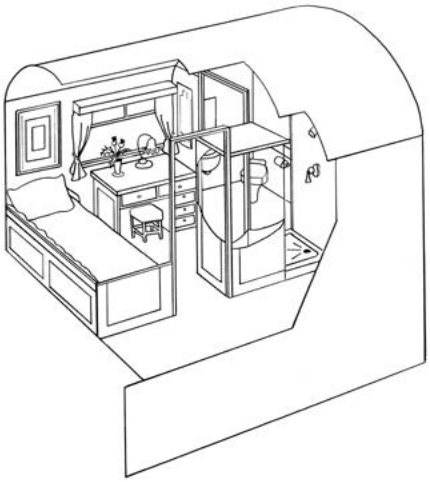
SINGLE CABIN